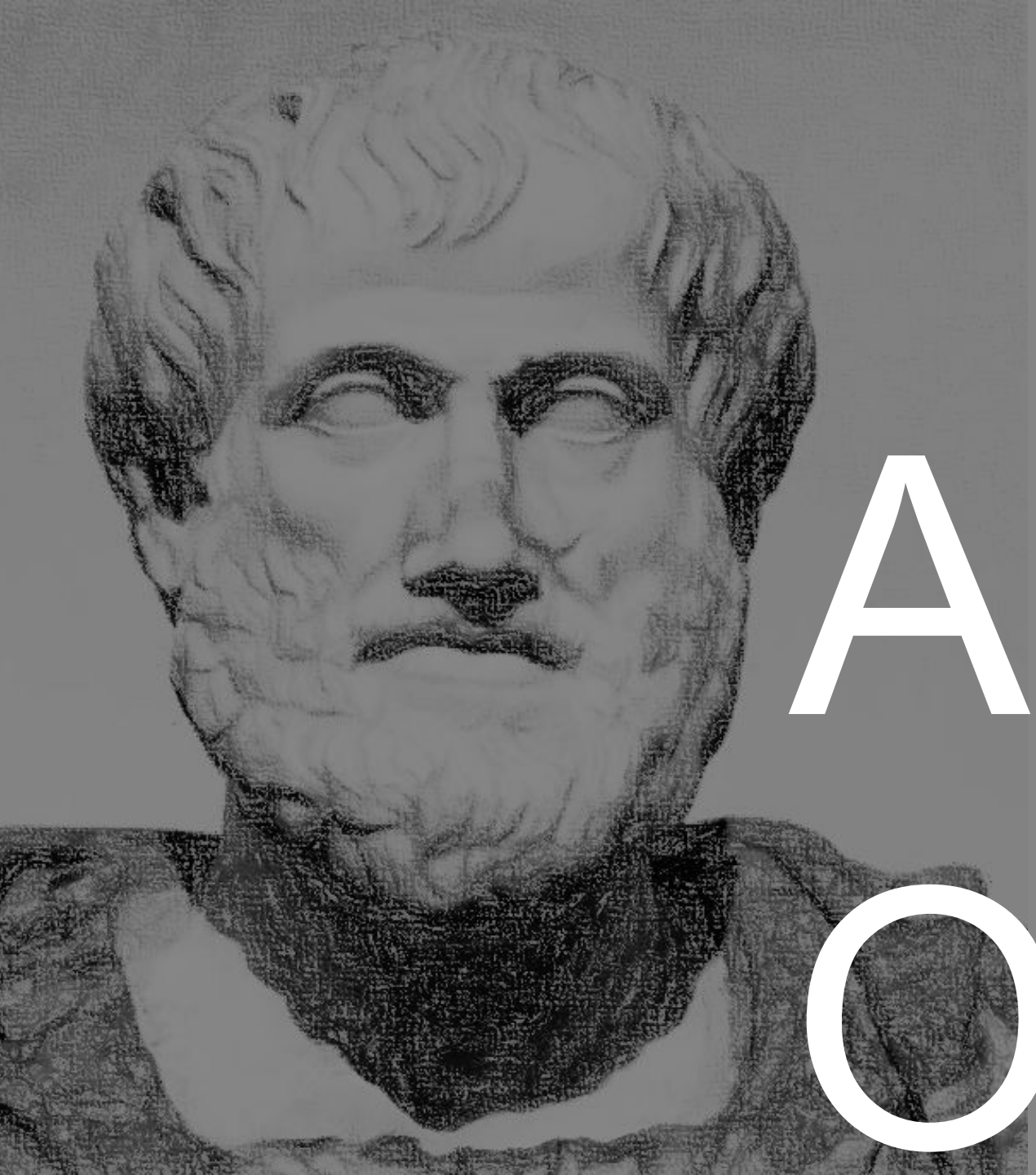

ARIST OTLE

Aristotle’s Philosophy

- Greek philosopher (384–322 BCE)
- Student of Plato, teacher of Alexander the Great
- One of the most influential thinkers in Western history
- Focus: Understanding reality through reason and experience

The Importance of Aristotle’s Philosophy

- Laid the foundation for logic, ethics, and science
- Shifted philosophy from abstract ideas to the real world
- Influenced Christian and medieval thought
- His approach shaped the scientific method
- Believed that knowledge begins with observation

Aristotle’s Approach

- Philosophy begins with wonder about the world
- Seeks to explain why things exist and change
- Combines reason + experience = true knowledge
- Looks for the purpose (telos) in everything

The Core of Aristotle’s Philosophy: What Was Most Important?

For Aristotle, the central question of human existence was: What is the ultimate purpose of human life? His answer was Eudaimonia.

Eudaimonia (εὐδαιμονία) is a Greek term often translated as "happiness," but it's much deeper than a fleeting emotion. It means "human flourishing" or "living well and doing well." It is a state of excellence achieved over a lifetime, guided by reason and virtue.

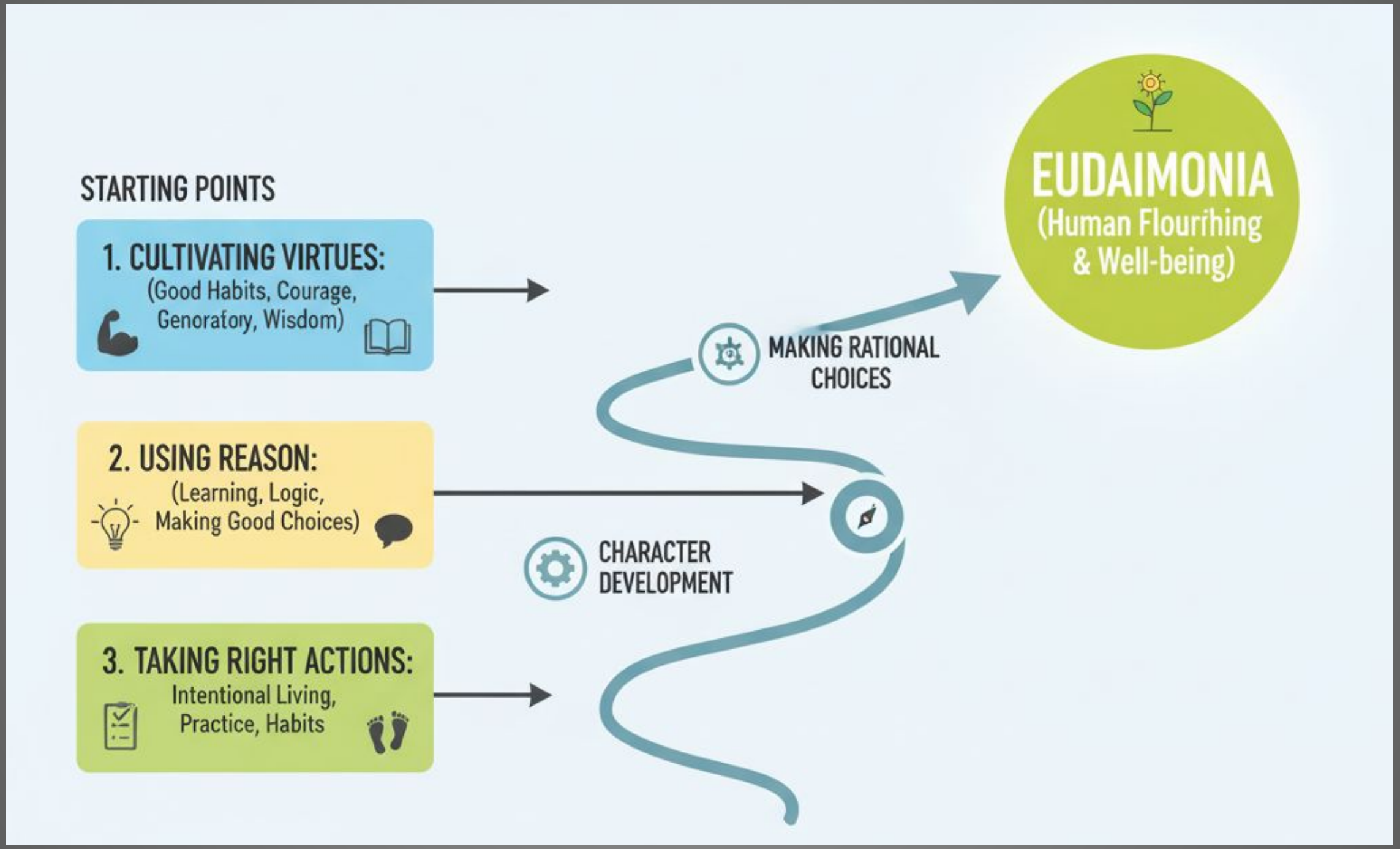
STARTING POINTS
1. CULTIVATING VIRTUES:
(Good Habits, Courage, Genorafory, Wisdom)
2. USING REASON:
(Learning, Logic, Making Good Choices)
3. TAKING RIGHT ACTIONS:
Intentional Living, Practice, Habits
MAKING RATIONAL CHOICES
CHARACTER DEVELOPMENT
EUDAIMONIA
(Human Flourihing & Well-being)

The Four Causes: Understanding "Why“

To truly know something, Aristotle argued we must understand its four "causes" or explanations. This isn't just about what caused it to happen, but a complete picture of its existence.

- The Material Cause (What is it made of?): The wood and nails.
- The Formal Cause (What is its form or essence?): The designer's blueprint or the idea of a table.
- The Efficient Cause (What brought it into being?): The carpenter who built it.
- The Final Cause (Telos) (What is its purpose?): To provide a surface for eating, working, etc.

For Aristotle, everything in the universe has a Telos, an intrinsic purpose or end. The *telos* of an acorn is to become an oak tree. The

The Four Causes

Everything in nature has a reason for being — nothing is random

The Material Cause
(What is it made of?): The wood and nails.

The Formal Cause
(What is its form or essence?): The designer's blueprint or the idea of a table.

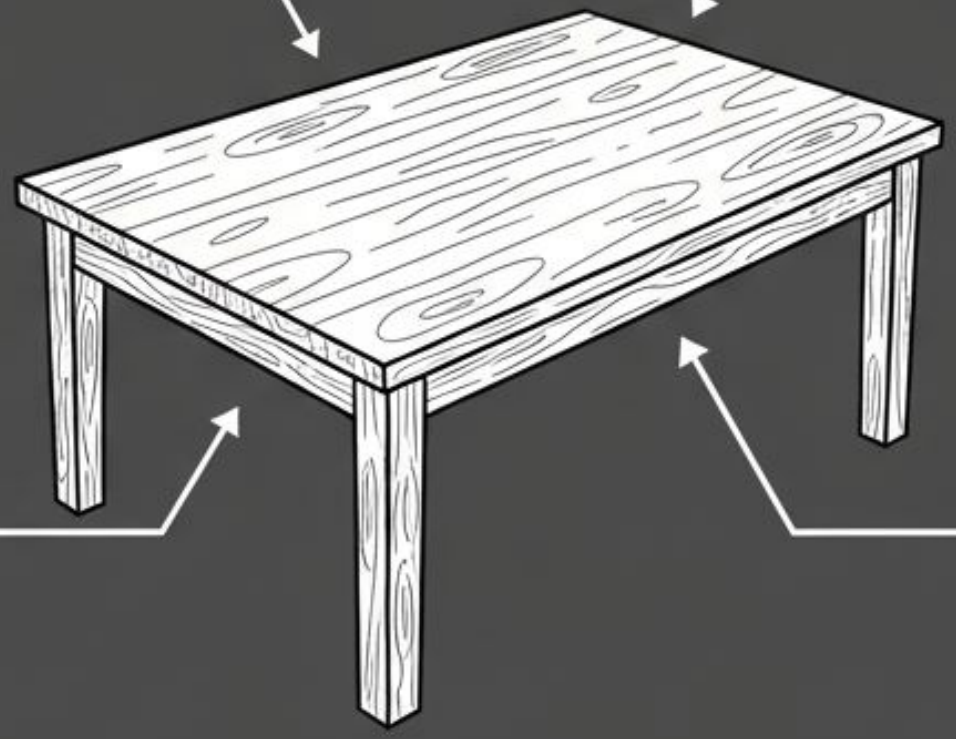

The Efficient Cause
(What brought it into being?): The carpenter who built it.

The Final Cause
(Telos) (What is its purpose?): To provide a surface for eating, working, etc.

Ethics: The “Golden Mean”

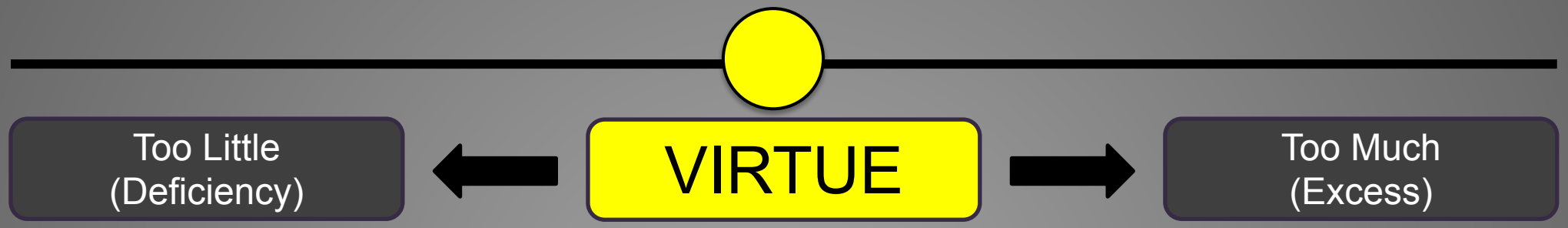

- Goal of human life: Eudaimonia – “flourishing” or “living well”
- Achieved through virtue and reason
- Virtue = balance between two extremes (the “Golden Mean”)
- Courage = between recklessness and cowardice
- Generosity = between wastefulness and stinginess

Happiness is not pleasure, but living a life guided by reason and virtue

Substance, Form, and Matter

- Plato: Forms exist in a separate, perfect world
- Aristotle: Form and matter exist together in real things
- Example: A tree = form (structure) + matter (wood)
- The unity of form and matter makes reality concrete

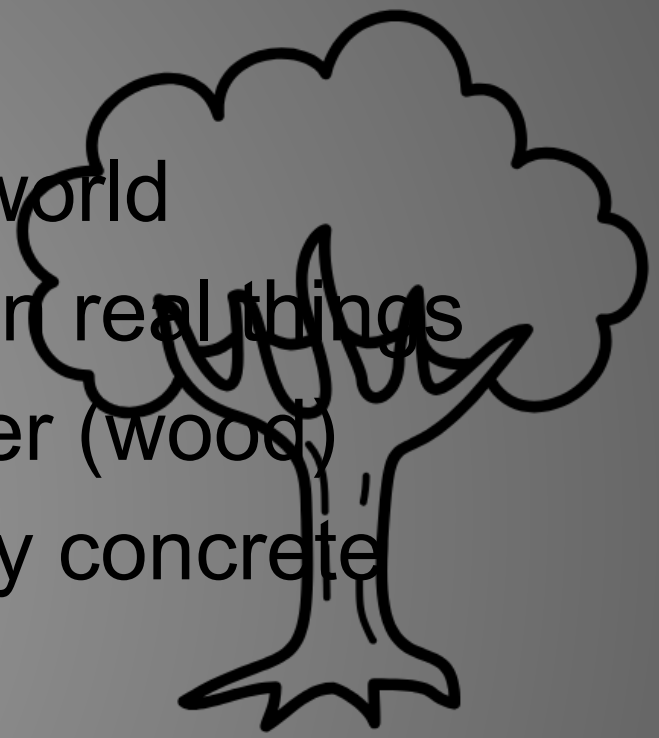

Aristotle's Categories: The Building Blocks of Reality

- In his work *Categories*, which is part of his collection of logical treatises known as the *Organon*, Aristotle set out to answer a fundamental question: In how many ways can we describe something?

- His goal was to identify the highest genera of "things that are" (*onta*). He concluded that everything we can say about a subject, every possible predicate, falls into one of ten fundamental classifications. These

The Core Distinction: Substance vs. Accidents

It's crucial to understand Aristotle's most important distinction: that between Substance and the other nine categories, which are often called Accidents (or attributes/properties).

Substance (οὐσία, ousia): This is the most fundamental category. A substance is an individual, existing thing that is not dependent on anything else for its existence. It is the "this" that we talk about—for example, this man, this horse, this tree. It is the subject of which other things (accidents) are predicated. Aristotle further divides substance into:

- Primary Substance: The individual thing itself (e.g., Socrates, a specific cat named Red). It can only be a subject, never a predicate. You can say "Socrates is human," but you cannot say "Human is Socrates.“

- Secondary Substance: The species and genera to which a primary substance belongs (e.g., human, animal). These are universal concepts that can be predicated of primary

Primary
Substance

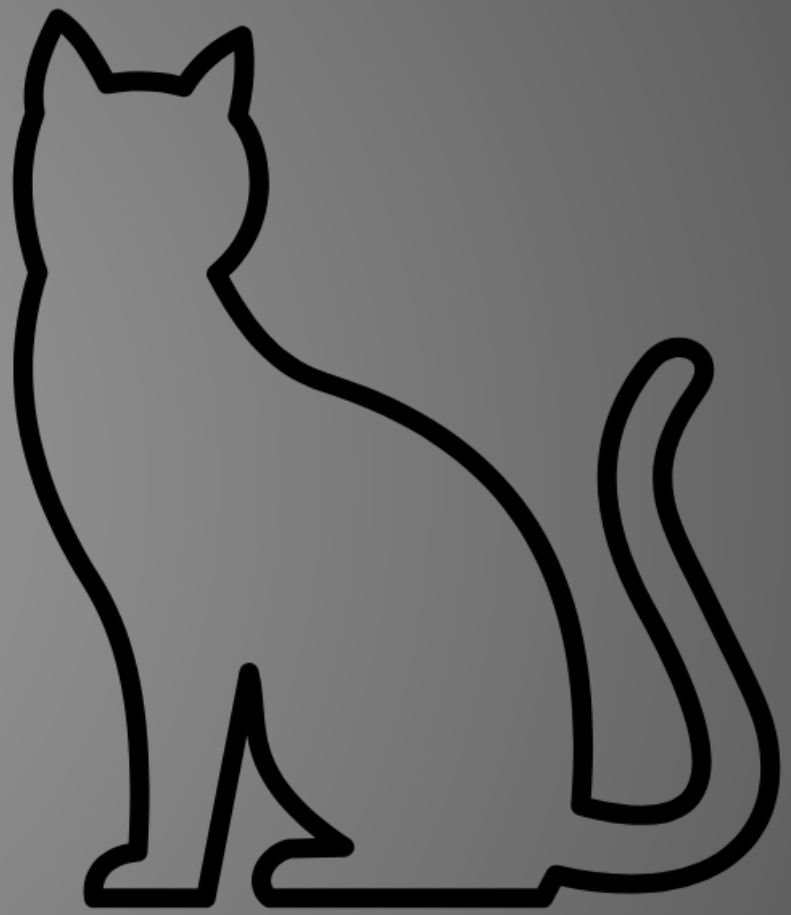

Secondary
Substance

Accidents (The Other 9 Categories): These are properties that cannot exist on their own; they must exist *in* a substance. For example, the color "white" cannot just float around in the universe by itself; it must be the color *of something*—of a wall, of a horse, etc. These nine categories describe the various ways a substance can be qualified or described.

The Ten Categories

1. Substance (*ousia*)
- What it is: The essential nature of a thing; an independent entity.
- Question it answers: "What is it?"
- Examples: A man, a horse, a plant, Socrates.

2. Quantity (*poson*)
- What it is: The dimension, size, or amount of a substance.
- Question it answers: "How much?" or "How many?"
- Examples: Two meters long, ten kilograms, five liters.

3. Quality (*poion*)
- What it is: The character, nature, or attribute of a substance.
- Question it answers: "What kind is it?"
- Examples: White, sweet, grammatical, hot.

4. Relation (*pros ti*)
- What it is: The way a substance is related to another substance.

5. Place (*pou*)

- What it is: The physical location of a substance.
- Question it answers: "Where is it?"
- Examples: In the marketplace, at the Lyceum, in the room.

6. Time (*pote*)

- What it is: The position of a substance in time.
- Question it answers: "When is it?"
- Examples: Yesterday, last year, now, at noon.

7. Position / Posture (*keisthai*)

- What it is: The posture or physical arrangement of a substance's parts.
- Question it answers: "In what position is it?"

9. Action (*poiein*)

- What it is: What a substance is actively doing to something else.
- Question it answers: "What is it doing?"
- Examples: Cutting, burning, running, teaching.

10. Passion / Affection (*paschein*)

- What it is: What is being done *to* a substance; how it is being affected by an action.
- Question it answers: "What is being done to it?"
- Examples: Being cut, being burned, being taught.

Why Are the Categories Important?

- Foundation of Logic: The categories provide a framework for constructing clear and unambiguous propositions. By understanding what kind of thing you are talking about (a substance, a quality, a relation), you can make more precise and logical statements.

- Metaphysical Framework: For Aristotle, these were not just linguistic categories but also ontological ones. They represent the actual structure of reality. The world, in his view, is fundamentally composed of substances and their attributes.

- Influence on Western Thought: This system of classification was enormously influential for over two millennia, shaping logic, metaphysics, and even grammar in the works of philosophers like

The Invention of Formal Logic

- Before Aristotle, thinkers like Socrates and Plato used logic in their arguments, but they did so informally. They focused on the content of arguments to test for truth. Aristotle's revolutionary move was to abstract the form of an argument from its content. He realized that the validity of an argument depends not on what you are arguing about, but on the structure of the reasoning itself.

- This is the essence of formal logic: creating a system with rules and variables that can test the validity of any argument, regardless of its specific subject matter.

Political Philosophy

- Humans are “political animals” — we thrive in communities
- Best state promotes the common good, not private interests
- Ideal government = balance between democracy and aristocracy
- Citizenship means participation, responsibility, and virtue